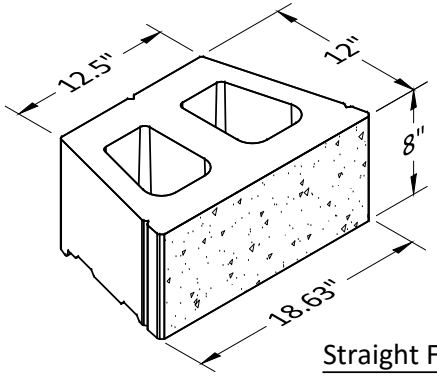

Straight Face Unit

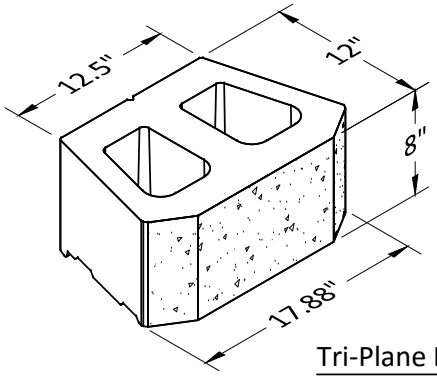

Tri-Plane Face Unit

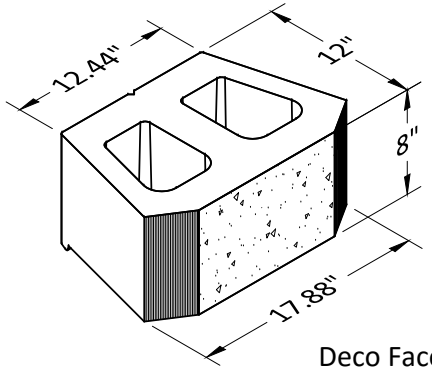

Deco Face Unit

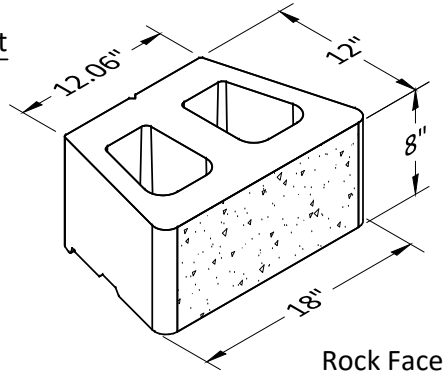

Rock Face Unit

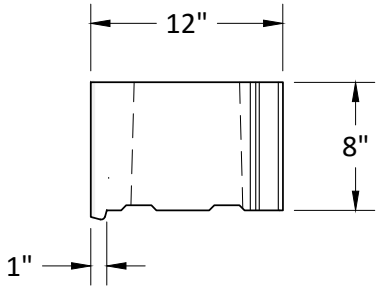

Typical Section

* Dimensions May Vary by Region

Copyright 2017 Keystone Retaining Wall Systems, LLC

The suitability and/or manner of use of any details contained in this document is the sole responsibility of the user.
Final project specific designs shall be prepared by a licensed professional engineer.

KEYSTONE® RETAINING WALL SYSTEMS A CORTECH COMPANY
4444 W 78th St, Minneapolis, MN 55435
952-897-1040

Project:			Title:		
Regal Stone Pro Details			8" Single Unit Details		
Designed By:	Checked By:	Scale:	Revision:	Date:	Drawing No:
RKM	CDM	No Scale		12-19-17	1 of 12

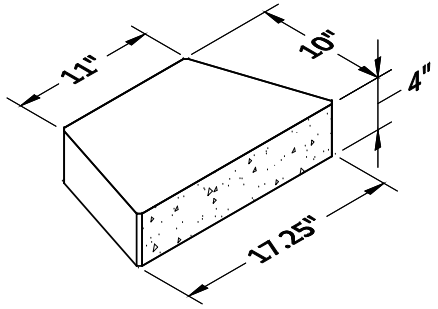

Cap Unit

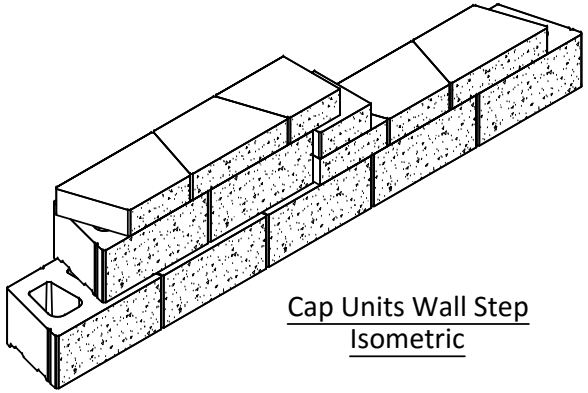

Cap Units Wall Step
Isometric

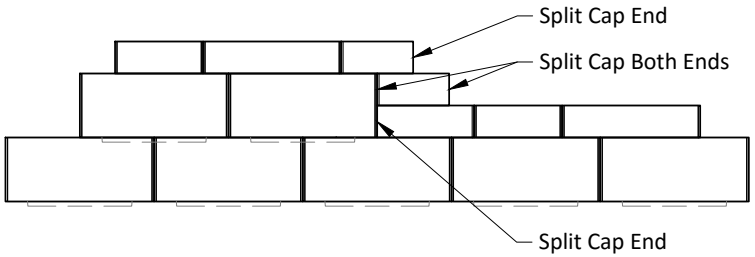

Cap Units Wall Step Plan

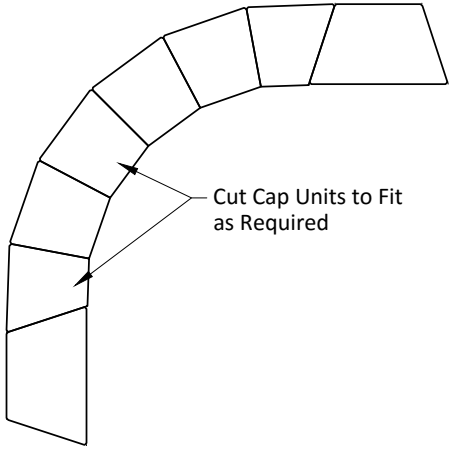

Cap Units Inside Curve

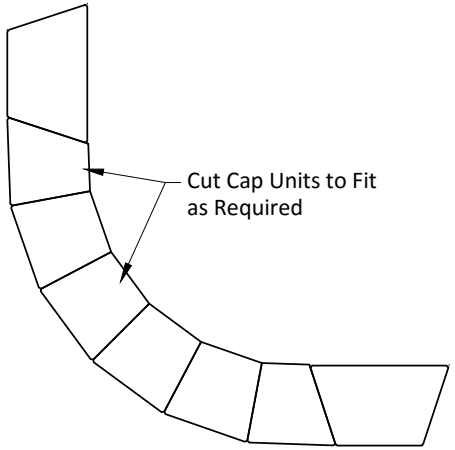

Cap Units Outside Curve

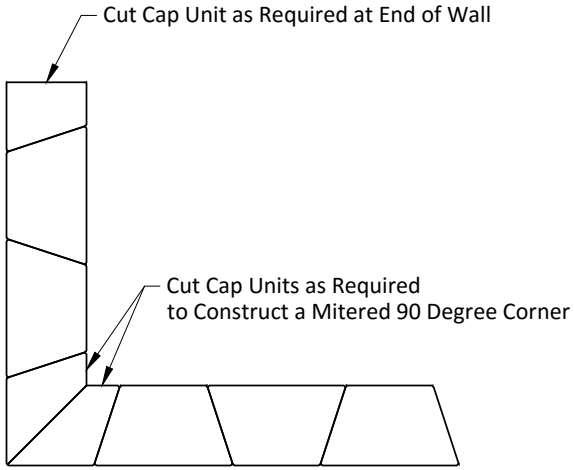

Cap Units Corner / Wall

Copyright 2017 Keystone Retaining Wall Systems, LLC

The suitability and/or manner of use of any details contained in this document is the sole responsibility of the user.
Final project specific designs shall be prepared by a licensed professional engineer.

4444 W 78th St, Minneapolis, MN 55435
952-897-1040

Project:			Title:		
Regal Stone Pro Details			Cap Unit Details		
Designed By:	Checked By:	Scale:	Revision:	Date:	Drawing No:
RKM	CDM	No Scale		12-19-17	2 of 12

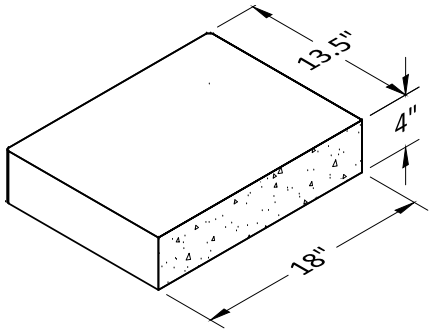

Cap Unit

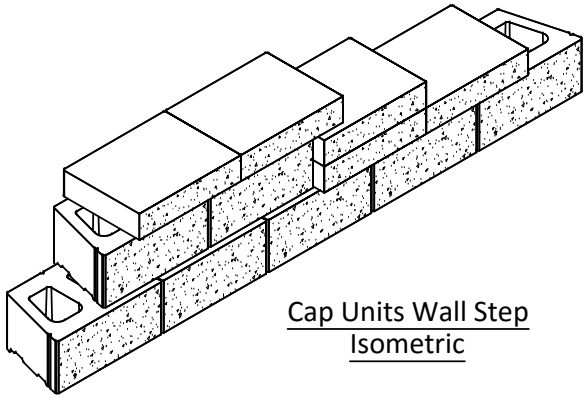

Cap Units Wall Step
Isometric

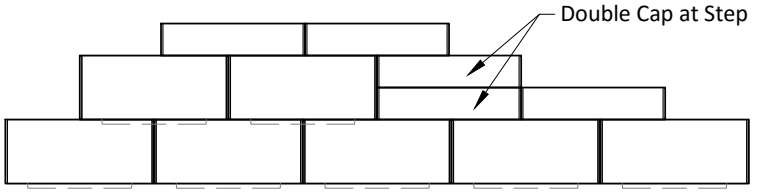

Cap Units Wall Step Plan

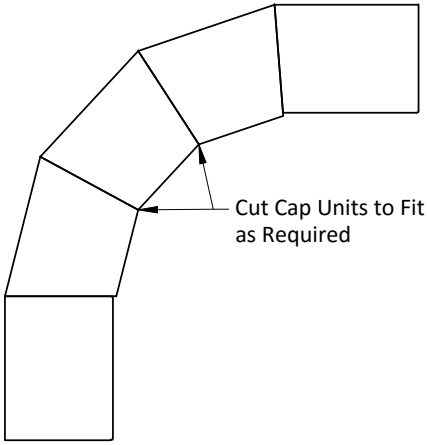

Cap Units Inside Curve

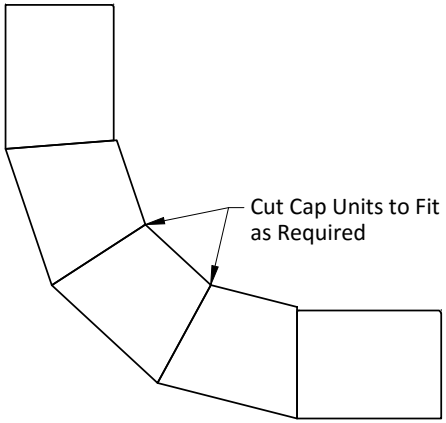

Cap Units Outside Curve

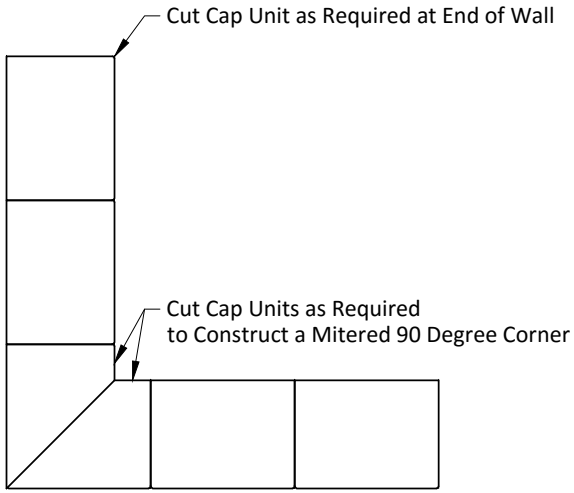

Cap Units Corner / Wall

Copyright 2017 Keystone Retaining Wall Systems, LLC

The suitability and/or manner of use of any details contained in this document is the sole responsibility of the user.
Final project specific designs shall be prepared by a licensed professional engineer.

4444 W 78th St, Minneapolis, MN 55435
952-897-1040

Project:			Title:		
Regal Stone Pro Details			Rectangular Cap Unit Details		
Designed By:	Checked By:	Scale:	Revision:	Date:	Drawing No:
RKM	CDM	No Scale		12-19-17	3 of 12

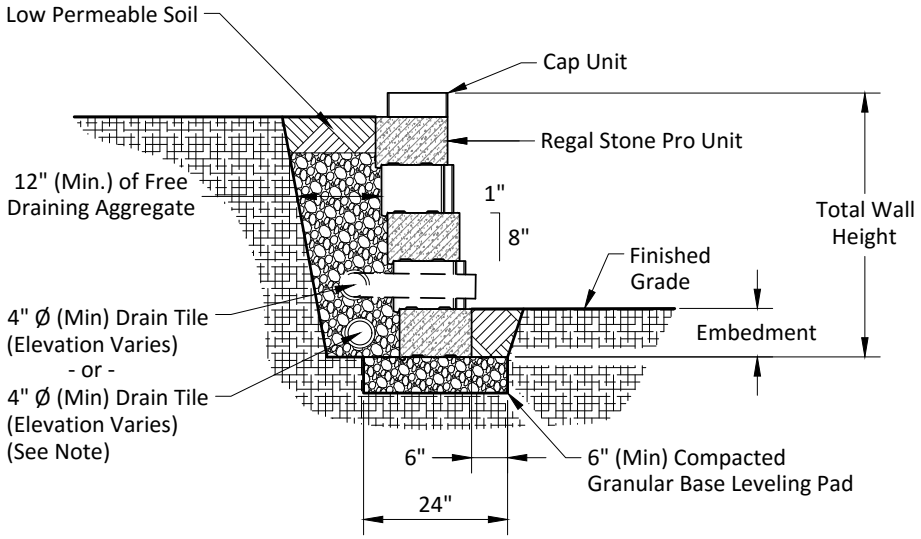

Gravity Wall Typical Section

Note:

Drain should be at bottom of wall when possible.

Utilize raised drain location when bottom of wall drainage is not possible.

Copyright 2017 Keystone Retaining Wall Systems, LLC

The suitability and/or manner of use of any details contained in this document is the sole responsibility of the user.

Final project specific designs shall be prepared by a licensed professional engineer.

4444 W 78th St, Minneapolis, MN 55435
952-897-1040

Project:			Title:		
Regal Stone Pro Details			Gravity Wall Details		
Designed By:	Checked By:	Scale:	Revision:	Date:	Drawing No:
RKM	CDM	No Scale		12-19-17	4 of 12

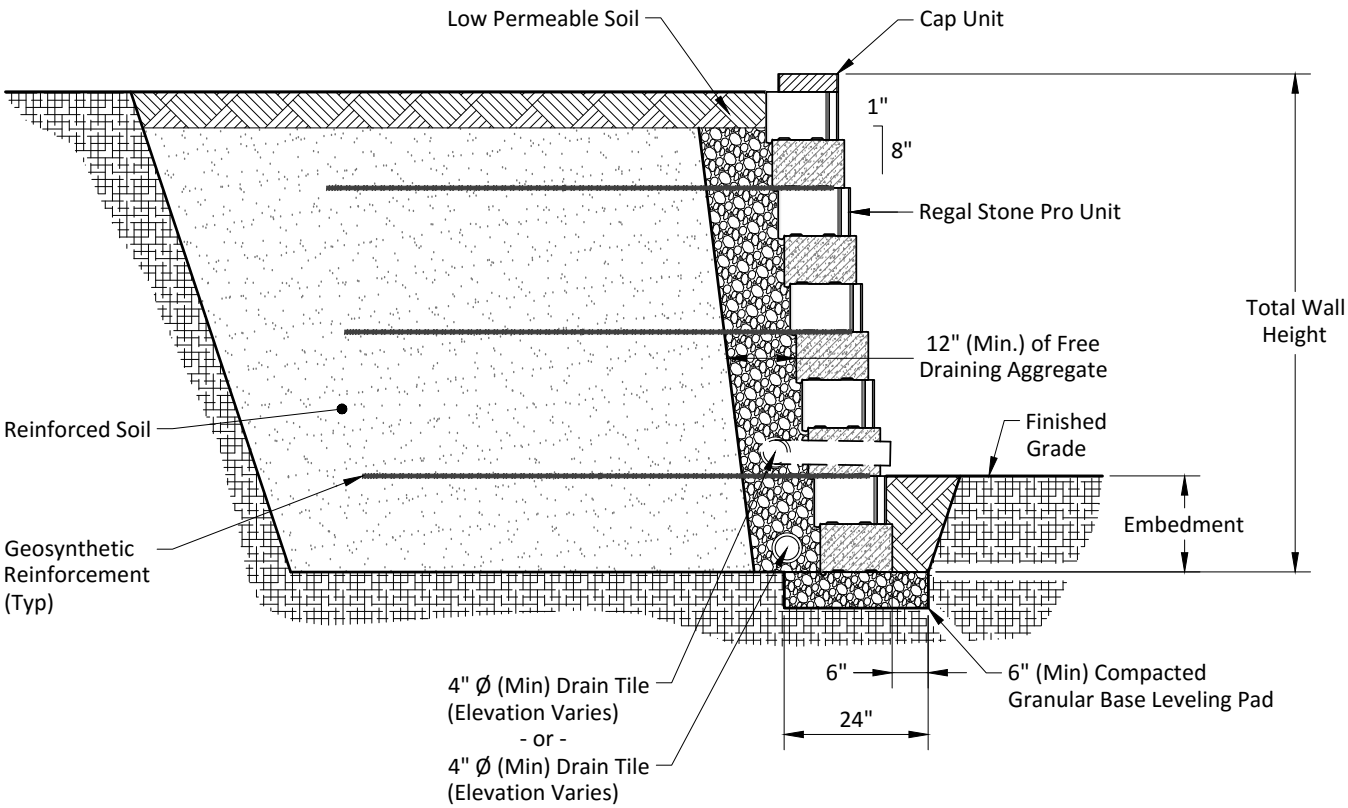

Typical Reinforced Wall Section

Note:

Drain should be at bottom of wall when possible.

Utilize raised drain location when bottom of wall drainage is not possible.

Copyright 2017 Keystone Retaining Wall Systems, LLC

The suitability and/or manner of use of any details contained in this document is the sole responsibility of the user.

Final project specific designs shall be prepared by a licensed professional engineer.

KEYSTONE RETAINING WALL SYSTEMS A CORTECH COMPANY

4444 W 78th St, Minneapolis, MN 55435

952-897-1040

Project:			Title:		
Regal Stone Pro Details			Reinforced Wall Details		
Designed By:	Checked By:	Scale:	Revision:	Date:	Drawing No:
RKM	CDM	No Scale		12-19-17	5 of 12

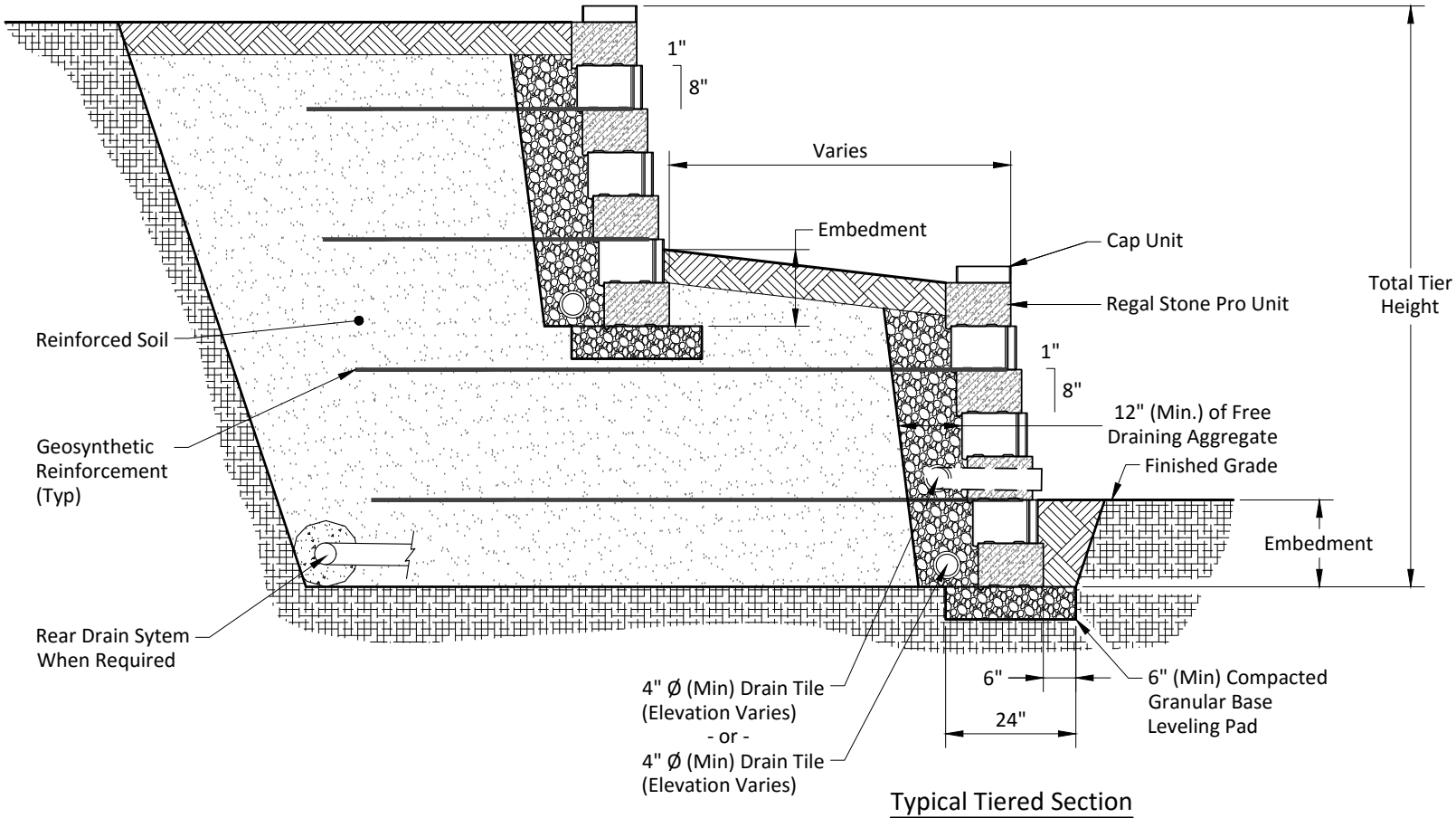

Typical Tiered Section

Note:
Drain should be at bottom of wall when possible.
Utilize raised drain location when bottom of wall drainage is not possible.

Copyright 2017 Keystone Retaining Wall Systems, LLC
The suitability and/or manner of use of any details contained in this document is the sole responsibility of the user.
Final project specific designs shall be prepared by a licensed professional engineer.

KEYSTONE RETAINING WALL SYSTEMS A COMTECH COMPANY
4444 W 78th St, Minneapolis, MN 55435
952-897-1040

Project:			Title:		
Regal Stone Pro Details			Tiered Wall Details		
Designed By:	Checked By:	Scale:	Revision:	Date:	Drawing No:
RKM	CDM	No Scale		12-19-17	6 of 12

Geogrid Note:

Measure, cut and orient the geogrid, as per the engineers design and the geogrid manufacturers specifications on correct strength direction.

Extend geogrid the wall height / 4 (H / 4) beyond the adjoining wall face at inside wall corners.

The reinforcement should not extend into the retaining wall units on the perpendicular leg of the 90 degree corner.

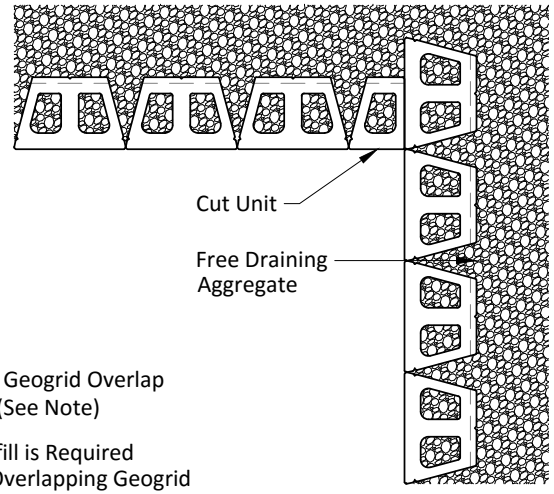

Typical Base and / or Odd Numbered Courses Plan

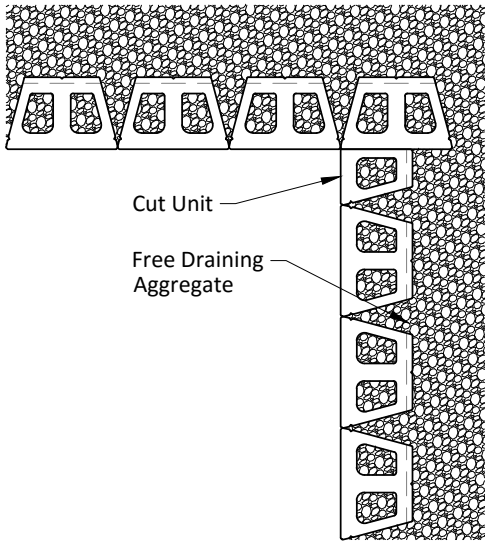

Typical 2nd and / or Even Numbered Courses Plan

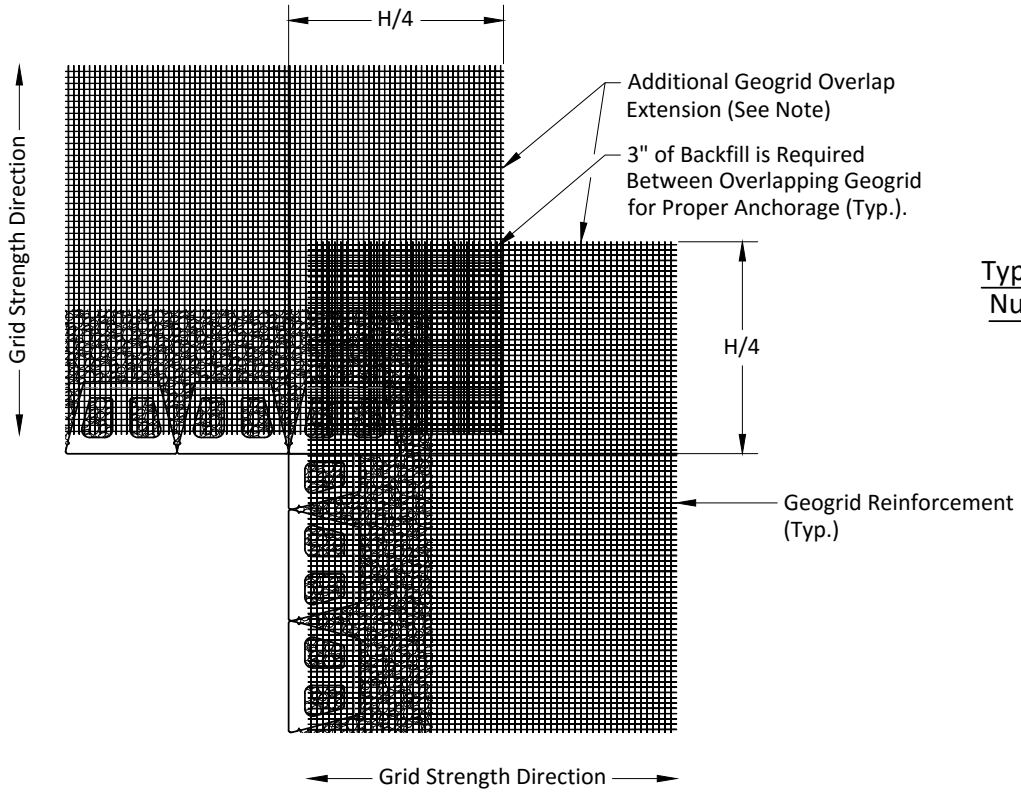

Inside Corner Plan with Geogrid

Block Note:

Cut units as required to maintain running bond pattern.

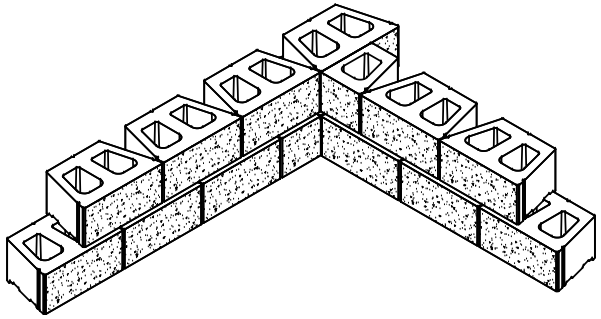

Inside Corner Isometric

Copyright 2017 Keystone Retaining Wall Systems, LLC

The suitability and/or manner of use of any details contained in this document is the sole responsibility of the user.
Final project specific designs shall be prepared by a licensed professional engineer.

KEYSTONE RETAINING WALL SYSTEMS A CORTECH COMPANY
4444 W 78th St, Minneapolis, MN 55435
952-897-1040

Project:			Title:		
Regal Stone Pro Details			Inside Corner Details		
Designed By:	Checked By:	Scale:	Revision:	Date:	Drawing No:
RKM	CDM	No Scale		12-19-17	7 of 12

Geogrid Note:

Measure, cut and orient the geogrid, as per the engineers design and the geogrid manufacturers specifications on correct strength direction.

The reinforcement should not extend into the retaining wall units on the perpendicular leg of the 90 degree corner.

Block Note:

Cut units as required to maintain running bond pattern.

Free Draining Aggregate Note:

Place additional free draining aggregate fill at outside wall corners to extend back from wall face each way a distance equal to the wall height / 2 (H / 2).

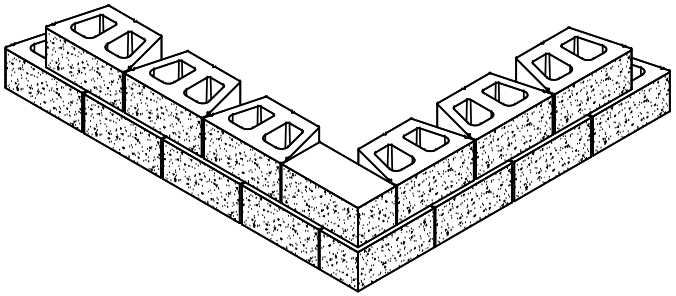

Outside Corner Isometric

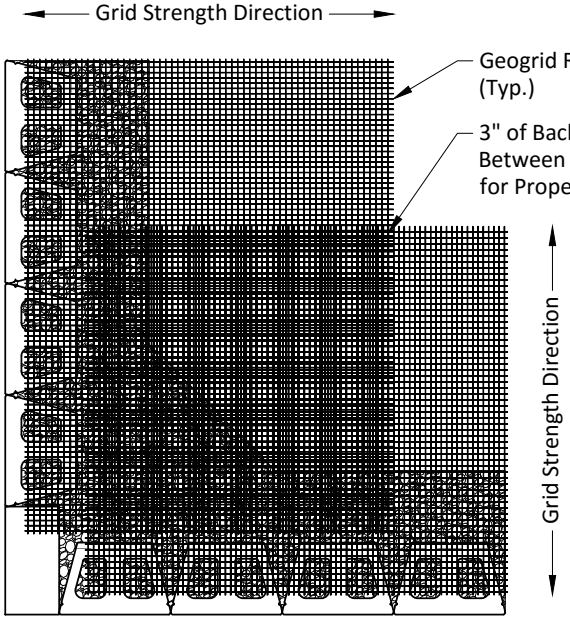

Outside Corner Plan with Geogrid

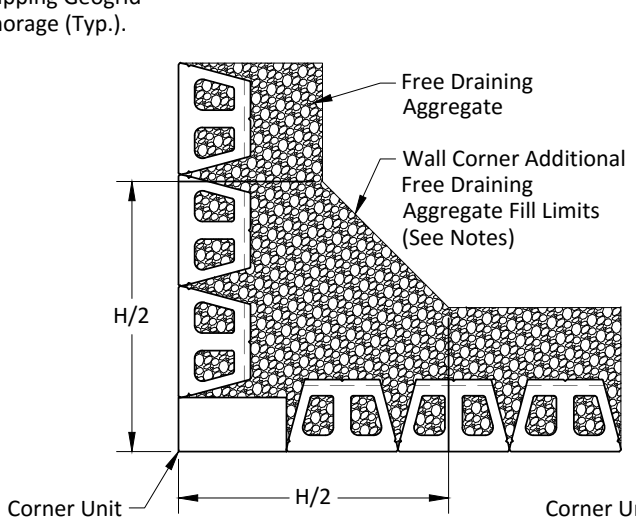

Typical Base and / or Odd Numbered Courses Plan

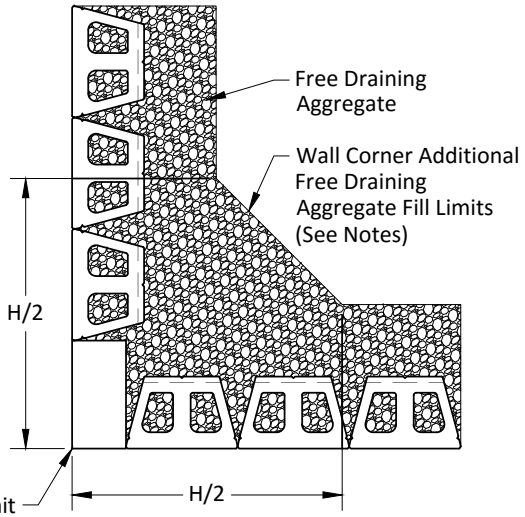

Typical 2nd and / or Even Numbered Courses Plan

Copyright 2017 Keystone Retaining Wall Systems, LLC

The suitability and/or manner of use of any details contained in this document is the sole responsibility of the user.
Final project specific designs shall be prepared by a licensed professional engineer.

KEYSTONE RETAINING WALL SYSTEMS A CORTECH COMPANY
4444 W 78th St, Minneapolis, MN 55435
952-897-1040

Project:			Title:		
Regal Stone Pro Details			Outside Corner Details		
Designed By:	Checked By:	Scale:	Revision:	Date:	Drawing No:
RKM	CDM	No Scale		12-19-17	8 of 12

Block Note:

Cut units as required to maintain running bond pattern.

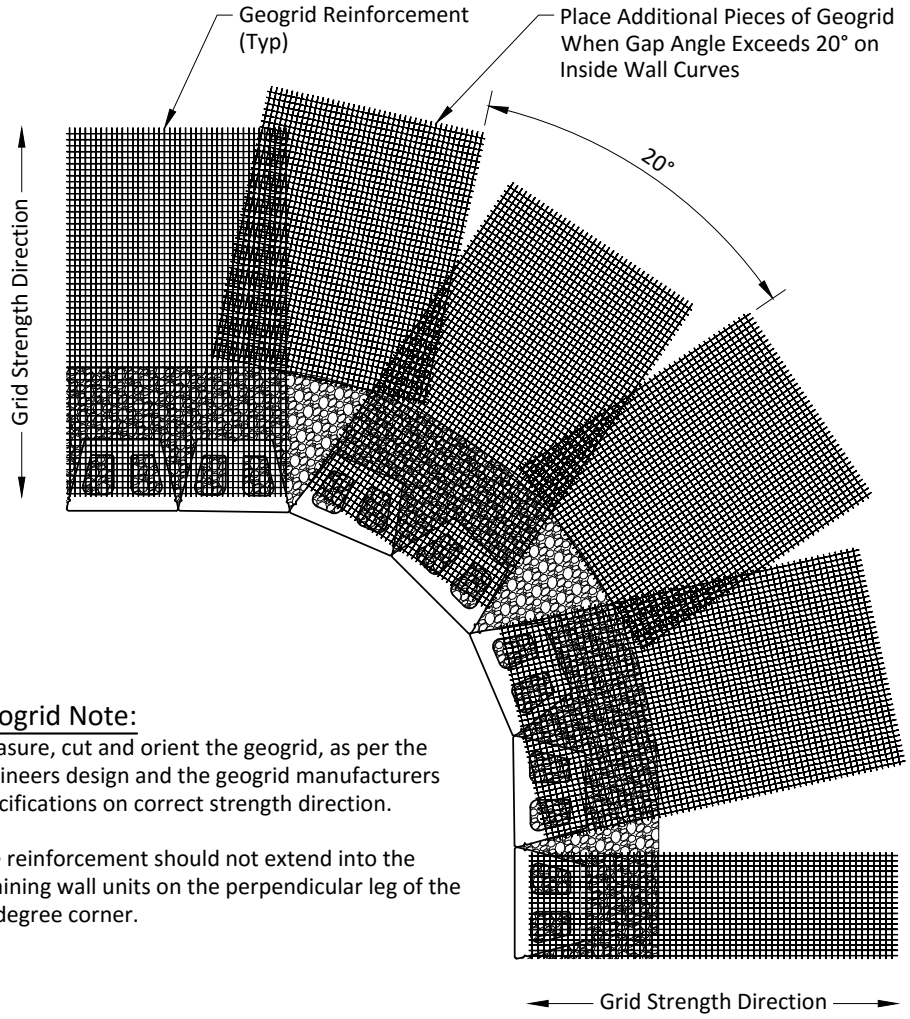

Geogrid Note:

Measure, cut and orient the geogrid, as per the engineers design and the geogrid manufacturers specifications on correct strength direction.

The reinforcement should not extend into the retaining wall units on the perpendicular leg of the 90 degree corner.

Inside Curve Plan with Geogrid

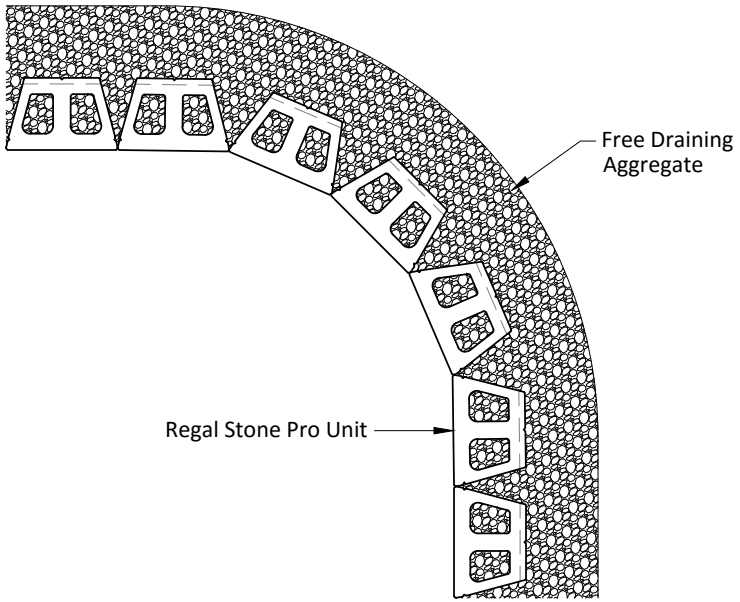

Typical Inside Curve Plan

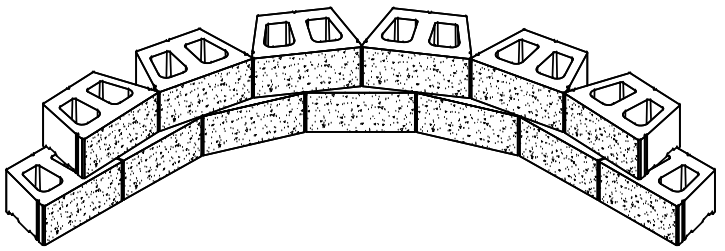

Inside Curve Isometric

Copyright 2017 Keystone Retaining Wall Systems, LLC

The suitability and/or manner of use of any details contained in this document is the sole responsibility of the user.
Final project specific designs shall be prepared by a licensed professional engineer.

KEYSTONE® RETAINING WALL SYSTEMS A COMTECH COMPANY
4444 W 78th St, Minneapolis, MN 55435
952-897-1040

Project:			Title:		
Regal Stone Pro Details			Inside Curve Details		
Designed By:	Checked By:	Scale:	Revision:	Date:	Drawing No:
RKM	CDM	No Scale		12-19-17	9 of 12

Geogrid Note:

Measure, cut and orient the geogrid, as per the engineers design and the geogrid manufacturers specifications on correct strength direction.

The reinforcement should not extend into the retaining wall units on the perpendicular leg of the 90 degree corner.

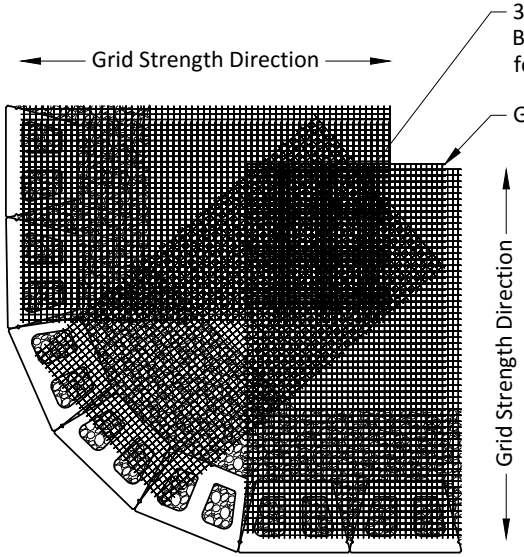

Outside Curve Plan with Geogrid

Free Draining Aggregate Note:

Place additional free draining aggregate fill at outside wall corners to extend back from wall face each way a distance equal to the wall height / 2 (H / 2).

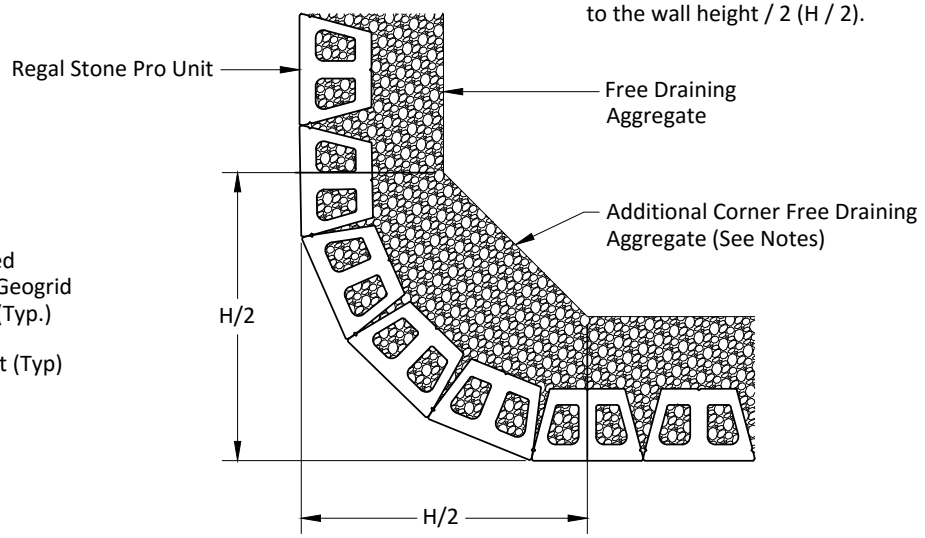

Typical Outside Curve Plan

Block Note:

Cut units as required to maintain running bond pattern.

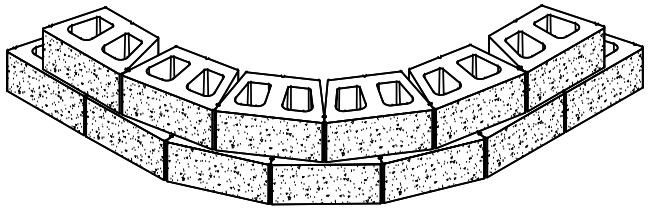

Outside Curve Isometric

Copyright 2017 Keystone Retaining Wall Systems, LLC

The suitability and/or manner of use of any details contained in this document is the sole responsibility of the user.
Final project specific designs shall be prepared by a licensed professional engineer.

KEYSTONE RETAINING WALL SYSTEMS A CORTECH COMPANY
4444 W 78th St, Minneapolis, MN 55435
952-897-1040

Project:			Title:		
Regal Stone Pro Details			Outside Curve Details		
Designed By:	Checked By:	Scale:	Revision:	Date:	Drawing No:
RKM	CDM	No Scale		12-19-17	10 of 12

Note:
Concrete filled tube or form to be set during the wall construction, not drilled through geogrid afterwards when directly behind units.

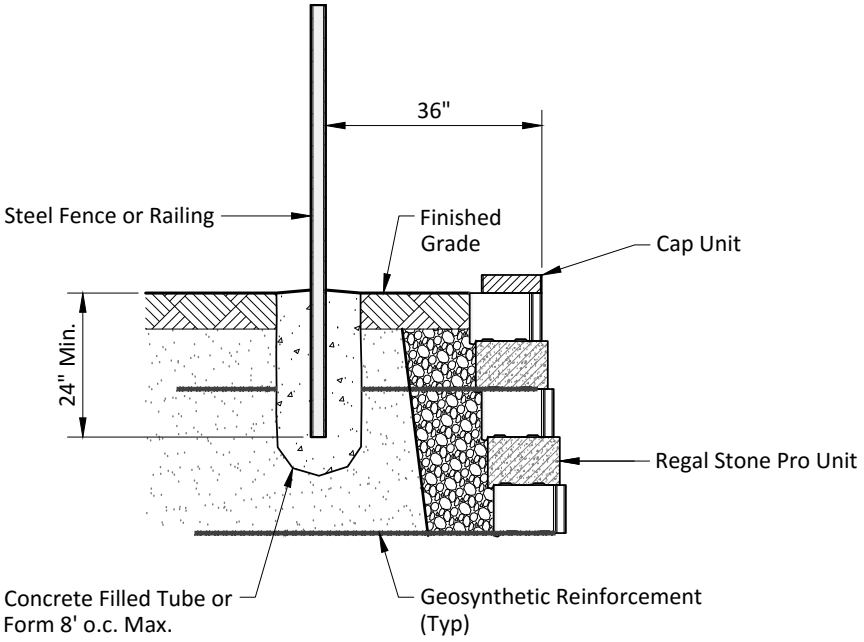

Fence Section

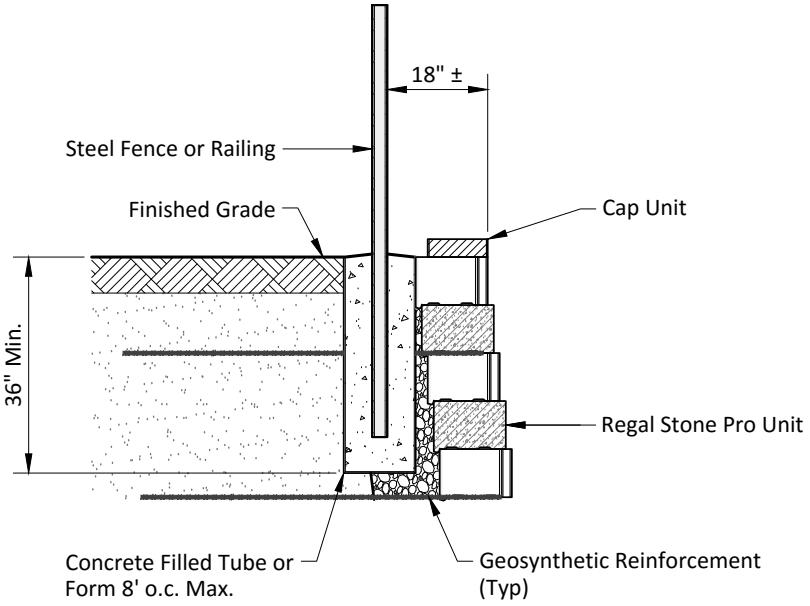

Minimum Offset Fence Section

Copyright 2017 Keystone Retaining Wall Systems, LLC
The suitability and/or manner of use of any details contained in this document is the sole responsibility of the user.
Final project specific designs shall be prepared by a licensed professional engineer.

4444 W 78th St, Minneapolis, MN 55435
952-897-1040

Project:			Title:		
Regal Stone Pro Details			Top of Wall Fence Details		
Designed By:	Checked By:	Scale:	Revision:	Date:	Drawing No:
RKM	CDM	No Scale		12-19-17	11 of 12

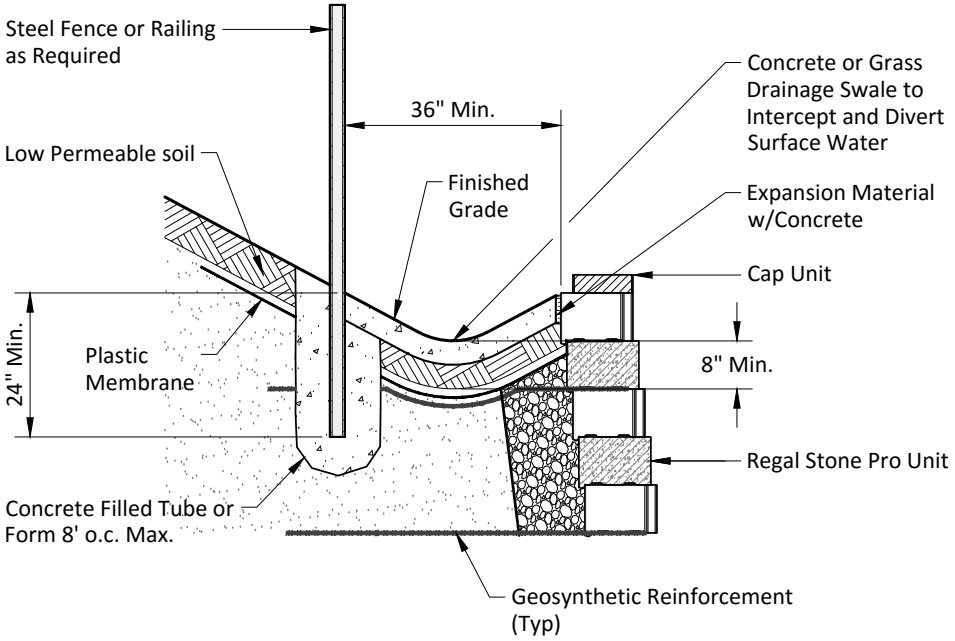

Drainage Swale Section

Copyright 2017 Keystone Retaining Wall Systems, LLC

The suitability and/or manner of use of any details contained in this document is the sole responsibility of the user.

Final project specific designs shall be prepared by a licensed professional engineer.

4444 W 78th St, Minneapolis, MN 55435
952-897-1040

Project:			Title:		
Regal Stone Pro Details			Top of Wall Swale Details		
Designed By:	Checked By:	Scale:	Revision:	Date:	Drawing No:
RKM	CDM	No Scale		12-19-17	12 of 12